predictive maintenance

by Disha Harwalkar

Submission date: 17-Jan-2022 09:56PM (UTC+0000)
Submission ID: 169392279
File name: predictive_maintenance_1600925_1419379460.docx (2M)
Word count: 4274
Character count: 23532

IOT DC Motor Predictive Maintenance System

Disha Harwalkar, Terry Gorman

***Abstract*— A motor is subjected to failures; hence a maintenance strategy needs to be implemented to ensure efficient working of the motor. There are various types of maintenance strategies, the most suitable strategy was the predictive maintenance. This paper proposes a predictive maintenance on the DC motor to monitor the ambient temperature, the temperature of the dc motor, the humidity, the acceleration, the speed, and direction of the motor. Before starting the project, project planning was done for a timeline of 10 weeks. To make the predictive maintenance more efficient it was integrated with an IOT platform called BLYNK to display the results. In addition to this a vibration test was done to convert the time- domain data to frequency- domain data for easy analysis and thereby ensure a well-organized predictive maintenance.**

***Index Terms*—Predictive Maintenance, IOT platform, Project Planning, Vibration test**

I. INTRODUCTION

In the industrial world, after a certain period of time the motors in numerous plants and factories are subjected to some kind of failures. These unplanned failures often lead to increased downtime periods and production losses. Therefore, it is necessary to employ measures to detect the faults early and take proper action before it becomes too chaotic [1].

Hence a maintenance strategy must be implemented in order to avoid such losses. There are numerous maintenance strategies namely the reactive maintenance, the preventive maintenance, and the predictive maintenance. The reactive maintenance is the maintenance strategy which is employed only after the system fails. this type of strategy can be extremely costly and harmful . while the preventive maintenance strategy is done before a fault occurs by doing timely maintenance. The biggest challenge faced is that the time to failure of the equipment are unknown and scheduling a plan when the equipment is still in its usable condition is still expensive. Predictive maintenance is a set of activities that detects signs of failures based on the system conditions in order to carry out appropriate maintenance work without disrupting the operation of the system. [1] . Therefore, out of the three maintenance strategies predictive maintenance is the most suitable method as it predicts the time to failure based on the condition of the machine without interrupting the machine's operation. It not only detects the faults but also identifies the problems in the equipment that can be fixed. Integrating the system with the technology that is the INTERNET OF THINGS can add more value and make predictive maintenance more efficient.

This paper proposes a predictive maintenance method for a DC motor that was designed and implemented using the D1 LOLIN MINI PRO Wi-Fi enabled microcontroller and the INTERNET OF THINGS (IOT). In order to achieve the predictive maintenance on the DC motor intelligent devices such as the sensors were integrated and embedded on to the DC motor to ensure optimum forward and reverse motor control, motor speed measurements, motor temperature measurement, ambient temperature and humidity measurement for efficient predictive maintenance. In this project the BLYNK application was used as the IOT platform for a simple interface control and web-based data logging system.

II. LITERATURE REVIEW

A. Maintenance Strategies:

Machine failures are costly; in order to reduce the costs and to increase the lifetime of the equipment, a maintenance strategy is necessary. There are different types of maintenance strategies such as the reactive maintenance, proactive maintenance, predictive maintenance, and the preventive maintenance. One such study of effects of the maintenance strategy was done on 3 medical instruments namely the dialysis machine, the anesthetic machine, and the hematology analyzer. In [2], most of the work consisted of analyzing the service history records in order to classify the faults for a period of 1 year with monthly intervals. It was found that proactive maintenance had significant impact on machine failures repetition resulting in increased unexpected downtime and service costs. On the other hand, predictive and preventive maintenance showed these are related to the number of faults during the effective lifetime of a medical instrument; the absence of such programs will increase the number of major and minor faults, which are costly and time consuming, and will shorten the machine's lifetime [2]. When a predictive maintenance was done on a DC stepper motor, with health status real-time perception and trend prediction [3],the stability and reliability of the whole system was improved. The predictive maintenance strategy contained the signal monitoring, driver local health monitor and output. The health monitoring module assisted in early fault detection and ensured normal operation of the motor control thereby ensuring efficient predictive maintenance strategy. The predictive maintenance enhanced the monitoring of the stepper motor, and the load parameters of the stepper motor were

collected and analyzed in order to improve the stability of the motor.

B. Integration of an IOT platform:

Another method of predictive maintenance on a conveyor motor was performed with the help of PLC control with SCADA and GUI to display and schedule meetings with the help of an industry 4.0 as an IOT platform [1]. Predictive maintenance requires huge amounts of data to perform accurate predictive maintenance. With the help of smart analytics this becomes easier for early detection of anomalies. An IOT platform adds more value and more intelligence to the data. The IOT brings in these advantages:

Real time conditioning:

It helps in increasing the accessibility to the information everywhere, on the phones, laptops, tabs that is it can be accessed everywhere and by everyone. the data visualization is not restricted to the station alone.

Flexible evaluation and analysis option:

It becomes easier for manufacturers to analyze the data without the help of experts and technology experts. They can create their own rules with their own parameters which can help trigger scheduling meeting for maintenance.

It also assists in product quality control.

The IOT platform provides huge storage capabilities so large amounts of data can be transmitted to not only give the full picture of the plant but the entire production network. it has turned a typical manufacturing facility to a smart factory which is it enhances machine- machine and machine to human communication by analysis and technology so that decisions can be made correctly. IOT transforms the physical data to digital data. [4]

From the above it can be concluded that the predictive maintenance increased the lifetime of an equipment, reduced the lost production cost, the maintenance cost. the IOT despite not being widespread enhances the predictive maintenance, makes it easier for fault detection and providing the optimum support for accurate predictive maintenance and the most cost-effective maintenance tool.

III. PREDICTIVE MAINTENANCE ARCHITECTURE

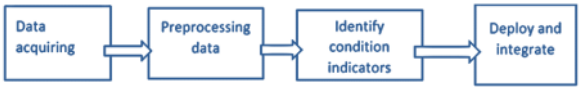

Fig 1: Architecture of the predictive maintenance

A predictive maintenance first employs data acquiring tool by using the various sensors to acquire the data. this is followed by preprocessing the data in order to extract the condition indicators with the help of vibration test which employs Fast Fourier transform method. The indication of the condition indicators is beyond the scope of this project .The following step is to integrate and deploy the maintenance strategy on the DC motor with the IOT platform for efficient predictive maintenance for system monitoring and control.

IV. PROJECT PLANNING

A project plan must be implemented before performing predictive maintenance on the DC motor. A project must be planned ahead of time in order to be completed successfully and on time. As a result, the project tasks are divided into a number of tasks. This is known as critical path project management. Each task is assigned an early start, an early finish, a late start, and a late finish with a duration. The project had a 10-week deadline. The tasks were divided into the following tasks:

TASKS	DURATION	DEPENDANCY
Plan(A)	1 day	-
Schematic design (B)	3 weeks	A
Schematic diagram simulation (C)	5 days	B
Hardware design(D)	5 days	B
Hardware Testing (E)	7 days	D
Software Testing (F)	5 days	E
Software DESIGN (G)	7 days	B
PCB implementation (H)	2 days	G
Iot (I)	3 days	C,F,H
Complete project testing (J)	7 days	I

Fig 2: (a)Task, Duration And Dependency For Project Management

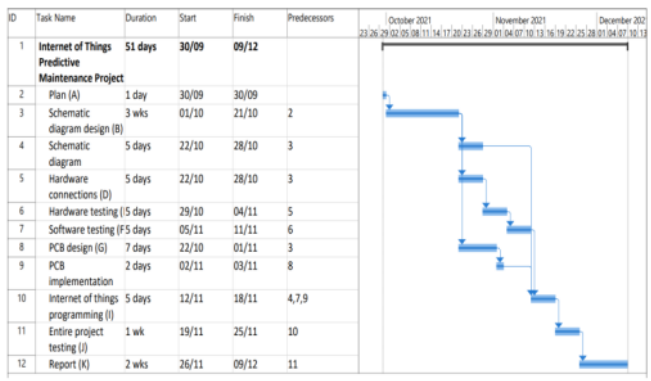

ID	Task Name	Duration	Start	Finish	Predecessors
1	**Internet of Things Predictive Maintenance Project**	**51 days**	**30/09**	**09/12**	
2	Plan (A)	1 day	30/09	30/09	
3	Schematic diagram design (B)	3 wks	01/10	21/10	2
4	Schematic diagram	5 days	22/10	28/10	3
5	Hardware connections (D)	5 days	22/10	28/10	3
6	Hardware testing (I	5 days	29/10	04/11	5
7	Software testing (F	5 days	05/11	11/11	6
8	PCB design (G)	7 days	22/10	01/11	3
9	PCB implementation	2 days	02/11	03/11	8
10	Internet of things programming (I)	5 days	12/11	18/11	4,7,9
11	Entire project testing (J)	1 wk	19/11	25/11	10
12	Report (K)	2 wks	26/11	09/12	11

Fig2(b): Gantt Chart for The Project Planning

The plan consisted the overall planning of the predictive maintenance project of the DC motor. The schematic design was implemented on the proteus software. This step included reading the various datasheets, the component examination was done in order to choose the device with the appropriate method. This was followed by the simulation of schematic diagram. The successful software design was followed by the hardware design on the breadboard, and the various components were tested. The software testing was done with appropriate Arduino codes with the appropriate libraries for the Weimos LOLIN MINI PRO microcontroller to be integrated in order to test the hardware tests well. After the individual components were tested and an appropriate design was incorporated. The PCB layout was then designed on the

software leading to the implementation of the PCB layout. This step included the soldering and the final test of the PCB in order to make sure it was fully functional. the next step was the design of a local web browser called the internet of things to make the predictive maintenance strategy more efficient. the entire project is then tested to ensure it is a successful project with successful codes.
The following tasks are explained in detail in the sections V, VI, VII, VIII respectively.

V. METHODOLOGY

The D1 LOLIN MINI PRO microcontroller was used in order to implement predictive maintenance on a DC motor. The TMP 36 was first scaled and offset, then the project was designed using various sensors. Temperature sensor, accelerometer, optocoupler, humidity sensor, and ambient temperature sensor are examples of these.

A. *Scaling And Offset*

For a window of a temperature say between -10°C to 50°C a TMP 36 sensor produces an output only in the range of 0.4V to 1V. Since a 10-bit microcontroller is the controller which has 2^{10} byte $= 1024$ bits and therefore only a fraction of the microcontroller's capabilities will be used. To use the full range of the microcontroller, the TMP 36 is rescaled to produce an output between 0V to 5V. A non-inverting OPAMP was used in the project to amplify the output from 0.4V to 0V and 1V to 5V.
This can be achieved by using the equation of a straight line to achieve a straight-line equation of:

$$y = 8.334x - 3.34.$$

where the gradient was given by $\frac{5}{1-0.4} = 8.334$ from the graph.

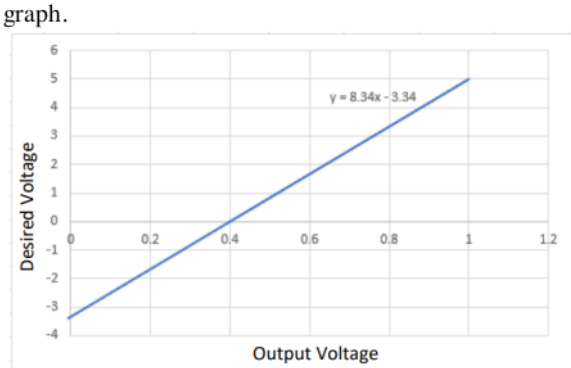

Fig 3: desired output vs TMP36 voltage

The overall gain was found to be 8.334 at an offset of 0.4V.

The required gain was found using the formula of transfer function given by :

$$\frac{V_0}{V_{in}} = \frac{R_2}{R} + 1$$

Where R_F is the feedback resistance
R is the input resistance of the OPAMP.
The figure is shown below:

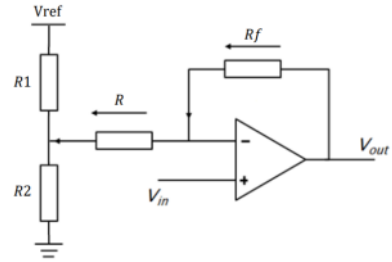

Fig 4: Non-Inverting OPAMP With Offset

A potential divider was used to apply the offset voltage of 0.4V, here R_1 and R_2 are the potential dividers with V_{ref} to be 5V, assuming R_2 to be 1kΩ R_1 was found to be 11.5kΩ using the formula:

$$V_O = \frac{R_2}{R_1 + R_2} \times V_{in}$$

Taking $V_O = 0.5V$ and V_{in} as $0.4V$
R is always assumed to be at least 10 times greater than R_2 to make sure the output produces a fine signal with negligible noise. So, R is taken as 10kΩ and therefore R_F becomes 73.4kΩ.

The most suitable OPAMP was found to be the analog output AD822AP. AD822AP was chosen over LM-741 since the LM-741 had the worst CMRR with 80dB and an input offset voltage ranging from 80mV to a maximum of 0.3V.the microcontroller was used as the motor controller in the project.
The microcontroller used is the D1 LOLIN MINI PRO with a supply of 5V, but it produces a maximum output of only 3.3V which is lesser than the output voltage the OPAMP produces at 50°C. hence in order to step down the voltage from 5V to 3.3V a voltage divider was connected to the OPAMP. The potential divider was designed to have the values 3.3k and 1k respectively. Considering the tolerance levels of the resistors the two values were chosen which provided a voltage close to 3.3V.

B. *DESIGN*

To perform predictive maintenance on a DC MOTOR, various sensors were used to measure various parameters, these were :

1) Temperature

Two TMP 36 sensors were used in the project, one was to measure the temperature of the DC motor and the other to measure the ambient temperature to avoid the overheating of DC motor and it operates at an ambient temperature suitable for the environment. Since this project employed two temperature sensors and the D1 LOLIN MINI PRO has only one analogue output pin, a 74HCT4051 MUX, an eight-channel analogue multiplexer, was used to connect the two sensors to the microcontroller.

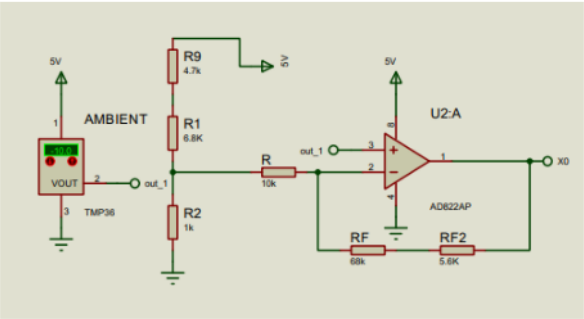

Fig 5 : Ambient Temperature TMP 36 sensor

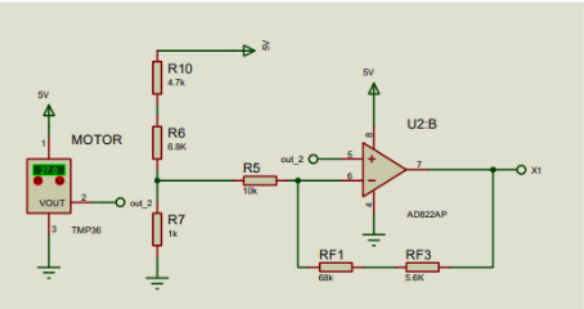

Fig 6 : Motor Temperature TMP 36 sensor

2) *Vibrations*

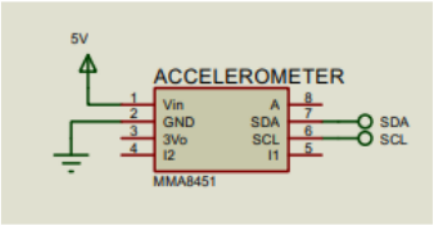

Fig 7: MMA8451 ADAFRUIT accelerometer to measure vibrations of the motor

An accelerometer is another type of sensor that detects machine vibrations in the X, Y, and Z axes. The project incorporated an MMA8451 ADAFRUIT accelerometer. This necessitated a 3V supply voltage, so the accelerometer input was linked to the microcontroller's 3V3. This is a digital accelerometer that communicates serially over the I2C bus. The I2C bus was developed to communicate between the microcontroller and the accelerometer. Serial communication is a types of data communication which transfers data bit by bit instead of transferring the entire data at once, the output then harmonizes all the outputs of each bit to produce a single output. The I2C has two pins called SDA and SCL. SDA is used to synchronize the data lines of the accelerometer with that of the microcontroller, whereas the SCL is used to synchronize the clock lines of the accelerometer and microcontroller. Serial communication is chosen over parallel communication since it produces less noise and less interference, hence it can be used for long distance transmissions, and it also uses less wiring.

3) *Humidity*

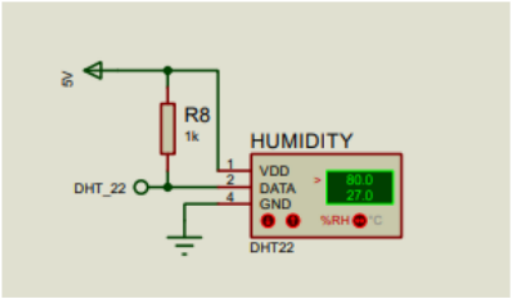

Fig 8: DHT22 humidity sensor to measure humidity

In the project, a humidity sensor, the DHT22 sensor, was also used to monitor the humidity of the motor. It is a digital sensor that functions as both a temperature and humidity sensor. It operates in a temperature range of -40°C to 55°C and is powered by a 3.3V-6V DC voltage applied to one of the microcontroller's digital outputs.

4) *Speed control*

To ensure that the speed of the DC motor is under control, a sensor can be used to measure the speed of the motor. One such sensor used in the project was a KTIR 0611S optocoupler, which detected the motor rotations per minute. It is a photosensor of the transmission type, consisting of a light emitting element (infrared LED) and a light receiving element (phototransistor) that are aligned to face each other. The signals are produced when a light beam is obstructed by an object. It generates frequency output by being installed between the motor shafts.

As the output is an alternating current signal that the microcontroller cannot detect, a tachometer, which is a frequency to voltage converter, is used. In the project, an LM2917 frequency to voltage converter was used. It measured the frequency or pulses produced by the rotating shaft of the machine fed into the optocoupler. It converted the frequency outputs of the optocoupler to analogue voltage outputs that the microcontroller can read. It was connected to a microcontroller's digital pin.

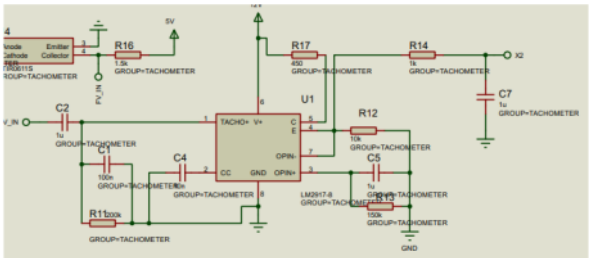

Fig 9: KTIR 0611S Optocoupler connections

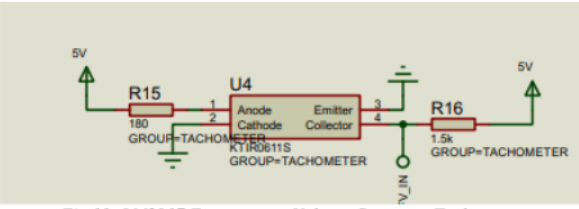

Fig 10: LM2917 Frequency to Voltage Converter Tachometer

An H bridge was used to drive the motor and change the direction of the DC motor using the application of a MOSFET driver. The H-bridge used in the project is a BD-6221, and it controled the speed of the motor with PWM pulses. To change the speeds of the DC motor, the PWM pulses changed the voltage values by changing the duty cycles.

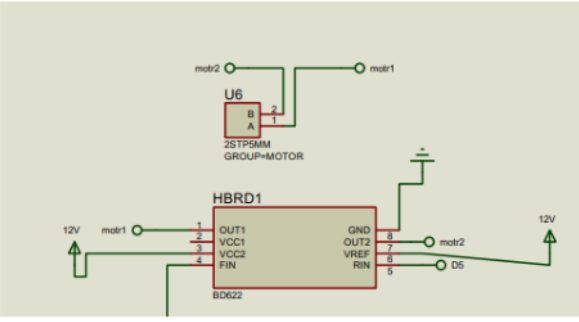

Fig 11 : BD 6221 H – Bridge with motor

C. *Software Design:*

The overall circuit design was done on the proteus application in order to implement the predictive maintenance design with the components:

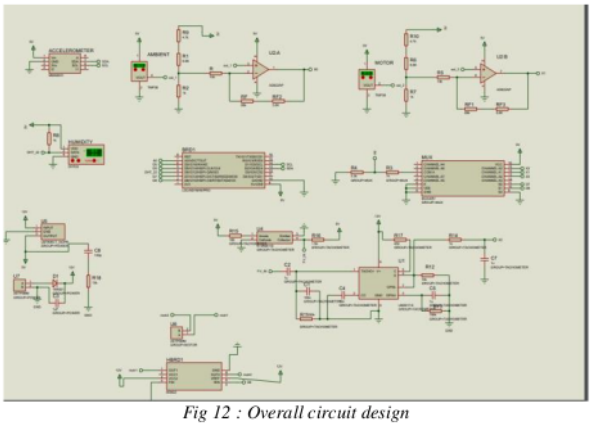

Fig 12 : Overall circuit design

The voltage regulator was used in the for the regulation of constant voltage supply. Since a 12V supply was given to the sensors and since the sensors only function on a supply of 5 V, so a voltage regulator was used to step down the voltages. The voltage regulator was chosen over the voltage divider as it gave a constant voltage of 5 V whatever the input supply was, but a potential divider divided the voltage to its particular ratio depending on the resistance ratio .

VI. IOT PLATFORM

With the help of a Wi-Fi module, the BLYNK program was used as an IOT platform. It is an internet-based digital dashboard for controlling embedded equipment. Widgets can be used to create a graphical interface. The data displayed in the widgets in the project were two temperatures in degrees Celsius, ambient humidity (in percentages), motor rotations per minute, and vibrations, which displayed the orientation of the motor in terms of forward or backward motion along with the DC motor position, and the data was updated every second. This BLYNK app was used to display all of the sensor data as well as control the motor direction, which is in forward, backward or stop. It is now easier to control the ESP822AP with this application anywhere at any time without the necessity to stay on site. With the help of suitable Arduino codes the IOT platform can be connected to the microcontroller via the internet .

VII. VIBRATION TEST

Once the data was acquired, it was subjected to preprocessing in order to obtain a result that can be easily analyzed. The data acquired was in its raw form and in order to achieve the fine data by that is by filtering the noise and outliers and thereby extract condition indicators included one such method called the vibration test. The vibration test uses the Fast Fourier transformation method to convert the time domain data into a frequency domain data. The data was taken from a vibration sensor, in this project from the accelerometer to test the vibrations of the DC motor. These help in displaying results with high precision. These record data over time and even present analytical reports from the data over time.

In the project the vibrations from the DC motor were taken from serial monitor when it the DC motor moved in clockwise and counterclockwise direction. The data was taken every 10 ms. to find the Fast Fourier transform data up to 128 data points were collected since the Fast Fourier transform takes data up to 2^n data points. After having done the Fast Fourier transform, the data was in its complex form. The data was then turned into its magnitude form which is given by:

$$magnitude = \frac{2}{N} x\ IMABS\big(G(s)\big)$$

Where N = number of data points = 128

IMABS = Function in excel to obtain the magnitude of the Fast Fourier transform

The frequency was then calculated by the equation:

$$\text{Frequency} = DATA * [\frac{1}{T_S}(\div N)]$$

WHERE $T_S = Sampling\ time\ in\ 10ms$

The frequency vs magnitude of the Fast Fourier transform graph was plotted.

VIII. SIMULATION AND RESULTS

The microcontroller monitored the temperatures, humidity acceleration, speed control and direction of the DC motor used. The DC motor operated at 12V. The PCB layout was designed with the dimension no greater than 150x80mm.The software was designed on the proteus software. In order to connect the DC motor.

A. PCB LAYOUT

Following the connection of each component and the completion of hardware testing, the PCB layout was designed on the proteus software as shown below:

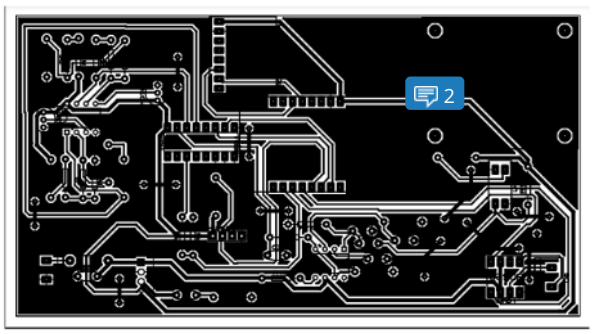

Fig 13: PCB layout of the Project

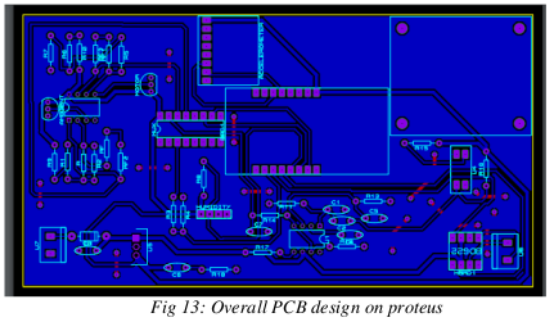

Fig 13: Overall PCB design on proteus

B. HARDWARE DESIGN OF THE PROJECT

Once the PCB layout was designed, the components were then soldered into the PCB board.

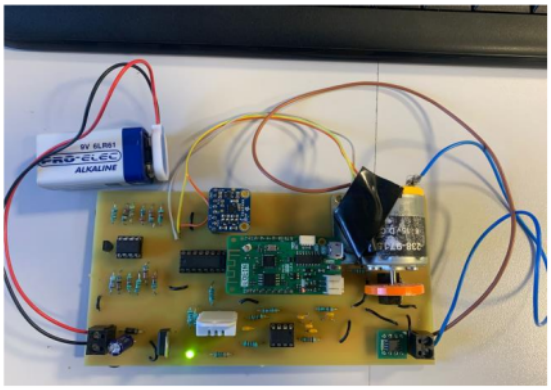

Fig 14: overall design of the predictive maintenance project

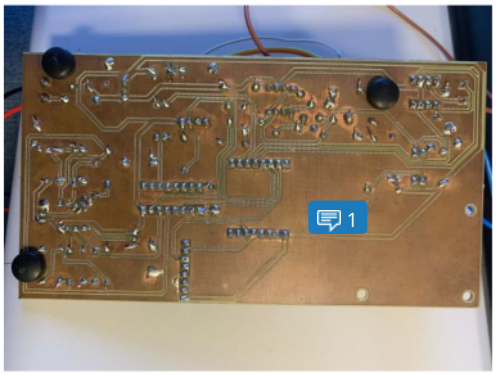

Fig 15: PCB layout under the board

C. SPEED CONTROL OF A DC MOTOR:

The speed and the direction of the DC motor was changed with the help of the optocoupler and the H-bridge.
The H-bridge used the PWM pulses to control the direction of the DC motor with the Arduino codes
The optocoupler controlled the speed of the DC motor , when the shaft was placed in between the optocoupler , it generated frequency pulses and these pulses controlled the speed of the DC motor. , below shows the figure of the DC motor:

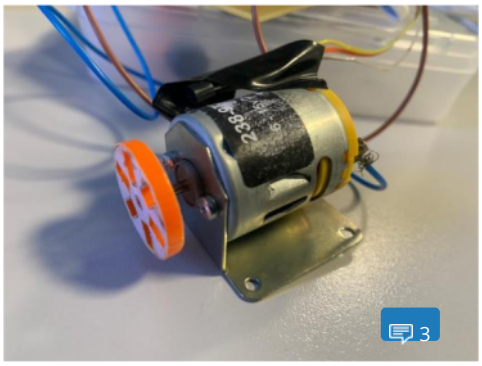

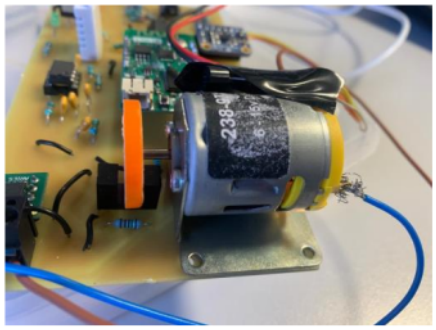

Fig 16: control of speed and direction of dc motor

D. OPTOCOUPLER RESULTS:

The optocoupler displayed results in the frequency domain. The shaft of the motor was placed between optocoupler and the rotations of the motor was displayed on the oscilloscope. below are results that were obtained on the oscilloscope as follows:

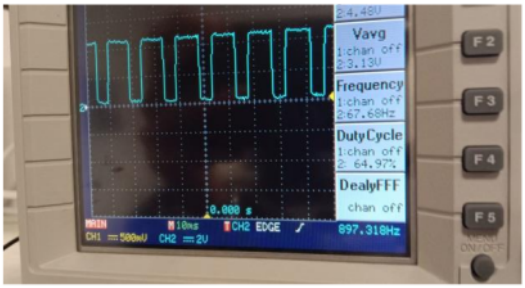

Fig 17: Optocoupler results on Oscilloscope

E. IOT PLATFORM

The IOT platform provided the humidity of the DC motor in percentage, the ambient temperature and motor temperature in °C the motor speed in RPM and the direction of the motor in forward direction, backward direction and stop. In addition to these the platform also showed the board placement.

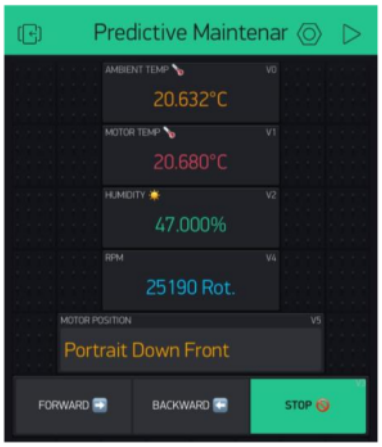

Fig 18: Data Display on the IOT platform BLYNK

F. VIBRATION TEST:

These were the results obtained from the vibration test when the DC motor ran in the clockwise direction.

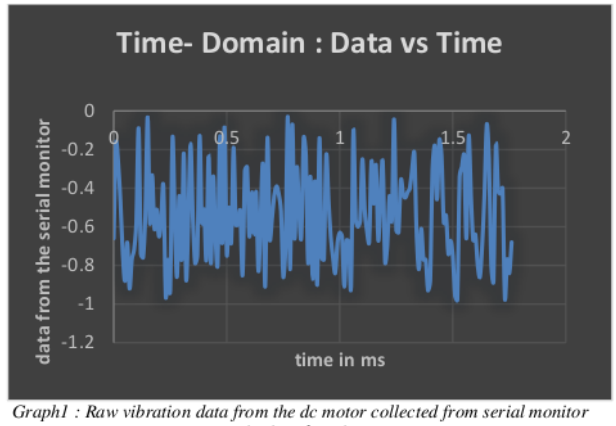

Graph1 : Raw vibration data from the dc motor collected from serial monitor in time domain

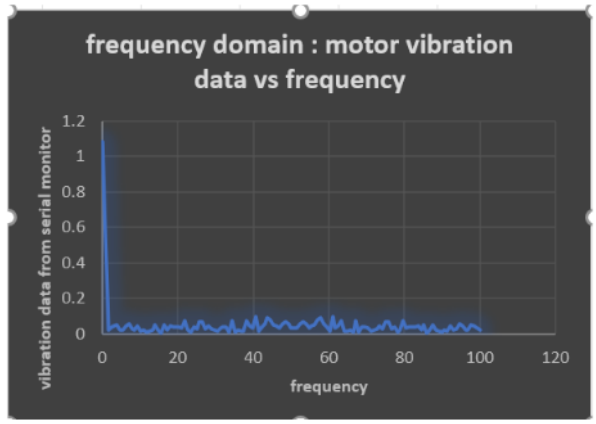

Graph 2: Transformed vibration data from the dc motor collected from serial monitor in frequency- domain

The data was then collected when the DC motor ran in the counterclockwise direction

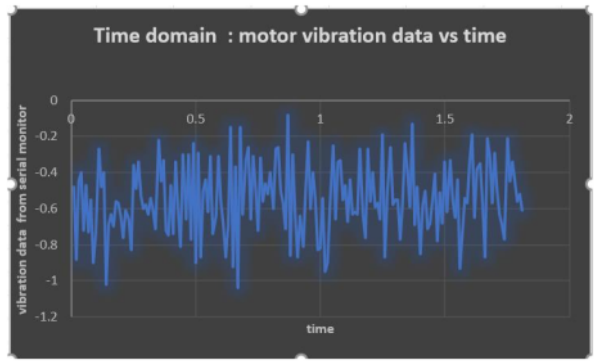

Graph3 : Raw vibration data from the dc motor collected from serial monitor in time domain

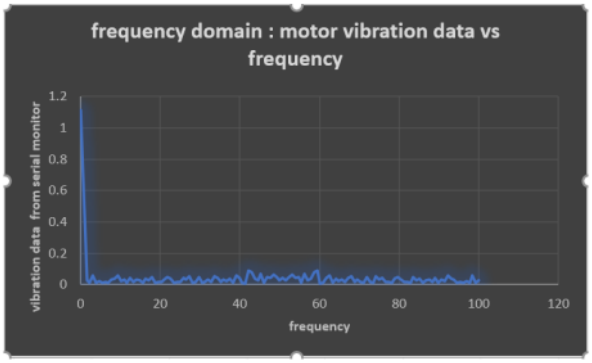

Graph 2: Transformed vibration data from the dc motor collected from serial monitor in frequency-domain

From the graphs above it is clear that the frequency domain data which was converted into a time domain data gave clearer data which lead to easier analysis of the data. The data collected was from the vibrations caused by the DC motor when it ran in both the clockwise and the counterclockwise direction.

IX. CONCLUSION AND FUTURE WORKS

This paper proposed an efficient and cost-effective predictive maintenance strategy of a DC motor integrated with the IOT platform called the BLYNK for a duration of 10 weeks on the basis of the project plan formulated. The LOLIN DI MINI PRO microcontroller monitored the ambient temperature, the humidity, the vibrations and the speed and direction of the DC motor. The data was then displayed on the BLYNK application which made it easier for monitor and control system. the vibration test was done in addition that converted the time -domain data into frequency domain data which helped in easy analysis of the data. The predictive maintenance can be improved with the addition of condition indicators and a greater number of sensors can be added in the future to improve the predictive maintenance and make it more accurate.

X. APPENDIX

```
  // BLYNK & LOLIN WEMOS Libraries
#include <SoftwareSerial.h>
#include <ESP8266WiFi.h>
#include <BlynkSimpleEsp8266.h>
#include <SimpleTimer.h>
#define BLYNK_PRINT Serial
// Selection Lines for MUX
#define MUX_A 13
#define MUX_B 15
// Analog Pin of Lolin Board
#define ANALOG_INPUT A0
// DHT Library
#include <DHTesp.h>
DHTesp dht;
#include <Wire.h>
// Accelerometer Library
#include "Adafruit_MMA8451.h"
#include <Adafruit_Sensor.h>
Adafruit_MMA8451 mma = Adafruit_MMA8451();
// H-bridge Pins
const int FIN = D0;
const int RIN = D5;
// BLYNK Credentials
char auth[] = "rgyaH59HMe0518C7YzZUF7MP0pQ-ilHL";
char ssid[] = "iPhone";
char pass[] = "nsrzxc1m7fsyt";
//BlynkTimer for sending sensors data
SimpleTimer timer;

void setup() {
 Serial.begin(9600);
 Blynk.begin(auth, ssid, pass);
 dht.setup(12, DHTesp::DHT22);
 timer.setInterval(1000L, sendData);
  pinMode(FIN, OUTPUT);
  pinMode(RIN, OUTPUT);
  pinMode(MUX_A, OUTPUT);
  pinMode(MUX_B, OUTPUT);
 Serial.println("Adafruit MMA8451 test!");

 if (! mma.begin()) {
   Serial.println("Couldnt start");
   while (1);
  }
  Serial.println("MMA8451 found!");

  mma.setRange(MMA8451_RANGE_2_G);

  Serial.print("Range = "); Serial.print(2 << mma.getRange());
  Serial.println("G");
}


 void changeMux(int a, int b) {
  digitalWrite(MUX_A, a);
  digitalWrite(MUX_B, b);
 }
  // Send Sensor data to Blynk
void sendData() {
  // AMBIENT TEMPERATURE

    changeMux(LOW,LOW);
    float a_Temp;
    float a_Temp_v;
    a_Temp = analogRead(ANALOG_INPUT); //Read Analog
Voltage of ADC Pin
    a_Temp_v = a_Temp * 0.004;
    a_Temp = ((70/4) * a_Temp_v)-49;
    Serial.print("A_Temperature: ");
    //Serial.println(a_Temp);
    Serial.println(" degrees C");
    Blynk.virtualWrite(V0,a_Temp);
    delay(1000); //waiting a second

   // MOTOR TEMPERATURE

    changeMux(LOW, HIGH);
```

```
    float m_Temp;
    float m_Temp_v;
    m_Temp     =     analogRead(ANALOG_INPUT);     //Read
Analog Voltage of ADC Pin
    m_Temp_v = m_Temp * 0.004;
    m_Temp = ((70/4) * m_Temp_v)+20;
    Serial.print("M_Temperature: ");
    //Serial.println(m_Temp);
    Serial.print(" degrees C");
    Blynk.virtualWrite(V1,m_Temp);
    delay(1000); //waiting a second

   //DHT READING

    float hum = dht.getHumidity();
    Serial.print("Humidity: ");
    Serial.println(hum);
    Blynk.virtualWrite(V2,hum);
    delay(1000);
    float temp = dht.getTemperature();
    //Serial.println(temp);
   // TACHOMETER

    changeMux(HIGH, LOW);
    int motor_speed = analogRead(ANALOG_INPUT);
    motor_speed = motor_speed * 24.6;
    Serial.print("RPM: ");
    //Serial.println(motor_speed);
    Blynk.virtualWrite(V4,motor_speed);
    delay(1000);

   // ACCELEROMETER
   1
   mma.read();
   Serial.print("X:\t"); Serial.print(mma.x);
   Serial.print("\tY:\t"); Serial.print(mma.y);
   Serial.print("\tZ:\t"); Serial.print(mma.z);
   Serial.println();

  /* Get a new sensor event */
  sensors_event_t event;
  mma.getEvent(&event);

  /* Display the results (acceleration is measured in m/s^2) */
  Serial.print("X:      \t");      Serial.print(event.acceleration.x);
Serial.print("\t");
  Serial.print("Y:      \t");      Serial.print(event.acceleration.y);
Serial.print("\t");
  Serial.print("Z:      \t");      Serial.print(event.acceleration.z);
Serial.print("\t");
  Serial.println("m/s^2 ");

  /* Get the orientation of the sensor */
  uint8_t o = mma.getOrientation();

  switch (o) {
    case MMA8451_PL_PUF:
      Serial.println("Portrait Up Front");
      Blynk.virtualWrite(V5,"Portrait Up Front");
      break;
    case MMA8451_PL_PUB:
      Serial.println("Portrait Up Back");
      Blynk.virtualWrite(V5,"Portrait Up Back");
      break;
    case MMA8451_PL_PDF:
      Serial.println("Portrait Down Front");
      Blynk.virtualWrite(V5,"Portrait Down Front");
      break;
    case MMA8451_PL_PDB:
      Serial.println("Portrait Down Back");
      Blynk.virtualWrite(V5,"Portrait Down Back");
      break;
    case MMA8451_PL_LRF:
      Serial.println("Landscape Right Front");
      Blynk.virtualWrite(V5,"Landscape Right Front");
      break;
    case MMA8451_PL_LRB:
      Serial.println("Landscape Right Back");
      Blynk.virtualWrite(V5,"Landscape Right Back");
      break;
    case MMA8451_PL_LLF:
      Serial.println("Landscape Left Front");
      Blynk.virtualWrite(V5,"Landscape Left Front");
      break;
    case MMA8451_PL_LLB:
      Serial.println("Landscape Left Back");
      Blynk.virtualWrite(V5,"Landscape Left Back");
      break;  }
  Serial.println();
  delay(500);
}

// MOTOR Direction Options
 BLYNK_WRITE (V3){
 switch (param.asInt()) {
   case 1: { // Item 1
     digitalWrite(FIN,HIGH); // set direction
     Serial.println("Clockwise direction");
     digitalWrite(RIN,LOW); // set speed to 70%
     Serial.println("Speed is 70%");
     Serial.println("Item 1 selected");
     break;
   }
   case 2: { // Item 2
     digitalWrite(FIN,LOW); // set direction
     Serial.println("CClockwise direction");
     digitalWrite(RIN,HIGH); // set speed to 70%
     Serial.println("Speed is 70%");
     Serial.println("Item 2 selected");
     break;
   }
   case 3: { // Item 3
     digitalWrite(FIN,LOW); // set direction
     Serial.println("Stop");
     digitalWrite(RIN,LOW); // set speed to 70%
     Serial.println("Speed is 70%");
     Serial.println("Item 3 selected");
     break;
   }
 }
```

```
}
void loop() {
timer.run(); // Initiates SimpleTimer
Blynk.run();
sendData();
}
```

XI. REFERENCE

1. Ali Jezzini, M. A. (2013). Effects Of Predictive Maintenance(Pdm), Proactive Maintenace(Pom) &Preventive Maintenance(Pm) On Minimizing The Faults In Medical Instruments. *2013 2nd International Conference On Advances In Biomedical Engineering*. Lebanon.
2. Liu, Z., Yuan, T., Zhou, X., Yuan, X., Wang, Y., & Zhang, X. (2020). Research On Predictive Maintenance Technology Of Stepping Motor Based On Load Value Analysis. *Chinese Automation Congress (Cac), Ieee*. China .
3. Sumeet Kaul, R. M. (N.D.). Predictive Maintenance And The Smart Factory. Pp. 1-7.
4. Wang, K. S. (2018). Initiating Predictive Maintenance For A Conveyor Motor In A Bottling Plant Using Industry 4.0 Concepts. *The International Journal Of Advanced Manufacturing Technology (2018) 97:3251–3271*, 3251-3271.

predictive maintenance

ORIGINALITY REPORT

16%	12%	7%	13%
SIMILARITY INDEX	INTERNET SOURCES	PUBLICATIONS	STUDENT PAPERS

PRIMARY SOURCES

1	Submitted to University of Greenwich Student Paper	10%
2	Ali Jezzini, Mohammad Ayache, Lina Elkhansa, Bassem Makki, Maya Zein. "Effects of predictive maintenance(PdM), Proactive maintenace(PoM) & Preventive maintenance(PM) on minimizing the faults in medical instruments", 2013 2nd International Conference on Advances in Biomedical Engineering, 2013 Publication	1%
3	integratedinnovation.xsead.cmu.edu Internet Source	1%
4	Submitted to Universiti Teknologi Malaysia Student Paper	1%
5	Kahiomba Sonia Kiangala, Zenghui Wang. "Initiating predictive maintenance for a conveyor motor in a bottling plant using industry 4.0 concepts", The International Journal of Advanced Manufacturing Technology, 2018	<1%

Publication

6	www.freepatentsonline.com Internet Source	<1 %
7	community.blynk.cc Internet Source	<1 %
8	Submitted to RMIT University Student Paper	<1 %
9	"CAC 2020 Table of Contents", 2020 Chinese Automation Congress (CAC), 2020 Publication	<1 %
10	iotdesignpro.com Internet Source	<1 %
11	Submitted to Universiti Malaysia Pahang Student Paper	<1 %
12	www.coursehero.com Internet Source	<1 %
13	eleceasy.com Internet Source	<1 %
14	Submitted to Macquarie University Student Paper	<1 %
15	link.springer.com Internet Source	<1 %
16	repository.nwu.ac.za Internet Source	<1 %

17	create.arduino.cc Internet Source	<1 %
18	forum.arduino.cc Internet Source	<1 %
19	riunet.upv.es Internet Source	<1 %
20	www.electroniclinic.com Internet Source	<1 %
21	Neil Cameron. "Electronics Projects with the ESP8266 and ESP32", Springer Science and Business Media LLC, 2021 Publication	<1 %

Exclude quotes	Off	Exclude matches	Off
Exclude bibliography	Off		

predictive maintenance

GRADEMARK REPORT

FINAL GRADE

35 /50

GENERAL COMMENTS

Instructor

A good effort here. You have included many results and at times explained them well. Be careful about including irrelevant figures and refer to those included in the text. Don't include software code in this kind of report

PAGE 1

PAGE 2

PAGE 3

PAGE 4

PAGE 5

PAGE 6

Comment 1

not required

Comment 2

not required

Comment 3

not required

PAGE 7

PAGE 8

PAGE 9

PAGE 10